Superior
Conferencing
Solutions

A SHURE Company

DIS Digital Discussion Systems

DC 6990 P Conference Unit

DC 6990 P Conference Unit

- Multi-user conference unit for tabletop placement
- 3.5" LCD color touch screen
- Multi-language user interface
- Chairman, delegate, and dual delegate functionality in one unit
- Reply function to allow brief comments or questions during a conference
- Chip card reader
- Attendance check
- Lockable XLR microphone connector
- Two headphone jacks for listening to language interpretation
- Loudspeaker

Description

The DC 6990 P is a digital portable conference unit in the DCS 6000 Digital Conference System. Compatible with any DCS 6000 series conference unit, the DC 6990 P offers advanced functionality and control, using the integrated 3.5" LCD touch screen to control the unit. The touch screen changes depending on the unit configuration: chairman, delegate or dual-delegate mode. An integrated card reader enables automatic, secure user sign in.

In chairman configuration, the touchscreen is used to manage meetings and control who is speaking. An all-delegate mute button immediately turns off all participants microphones so the chairman has exclusive speaking rights. The chairman unit has all the resource available to manage a vote, including a pre-vote attendance check, initiating the vote, and viewing results in realtime on the screen. The chairman can monitor any translation channel with the headphone output.

The DC 6990 P has advanced delegate operation, including a dual mode for two users at a time. In delegate modes, units display who is speaking and who is in the request queue. Three touch-screen voting buttons are prompted when a voting session has been initiated. When the voting session ends, the voting results display on the screen.

Improving the flow of the conference, the system supports a Reply mode to briefly comment or ask a question to the present speaker. Reply mode is available in VOX, Manual, and Automatic microphone operating modes. The DC 6990 P allows up to 10 customizable Reply function, to specify the nature of the comment, such as a follow-up question or a supporting argument. Advanced functionality can be added in combination with the SW 6000 Conference Management Software, including conference control, agenda handling, and messaging.

The gooseneck microphones GM 652x or GM 6622 can be locked to the unit with a 1.5 mm hex key. The lock is accessible from the small hole to the left of the XLR socket. Turn the hex key counter clockwise to lock the gooseneck microphone to the unit and turn the hex key clockwise to unlock the gooseneck microphone from the unit.

The unit can be placed on a surface for use, or can be fixed to the table using the mounting holes underneath the unit.

Features

The DC 6990 P has the following standard features:

- Conference unit configurable as chairmen, delegate or dual-delegates operation
- LCD for following the agenda, receiving messages, viewing voting results and managing speaker lists
- Functions in all DIS microphone operation modes: Automatic, FIFO, Manual and VOX (voice activation)
- Supports Reply functionality to briefly comment or ask a question to the present speaker
- Provides selection of up to 10 customizable Reply buttons and view of Reply Queue for chairman operation
- Support for three microphone interrupt modes enabling 'ping pong' mode
- Supports voice activation and automatic off microphone operation
- Language selection for the user interface
- Two headphone sockets and channel selectors for dual-delegate monitoring of interpretation
- Chip card reader for secure delegate login
- Two RJ-45 ports provide power, audio, and control transport across a single chain of chairman, delegate, and interpretation units
- DCS-LAN connection uses CAT 5e (or higher) shielded F/UTP or U/FTP cabling
- Configurable buttons for alternate functions and different languages
- Lockable XLR gooseneck microphone connector
- High-quality loudspeaker for listening to the conference
- Dedicated buttons for 3-button and 5-button voting sessions and attendance check

Specifications

Electrical

Frequency response (headphones)	65 Hz-16 kHz
Frequency range (loudspeaker)	150 Hz-15 kHz
Power consumption	4.0 W
Power maximum (loudspeaker)	3.0 W RMS
THD	< 0.1 %
Signal-to-noise ratio	> 90 dBA
Headphone connection	Two 3.5 mm jack, female stereo sockets
Display	3.5" LCD graphical color touch screen

Interconnections

DCS-LAN	Two RJ45 female sockets with auto-termination

Mechanical

Mounting	Tabletop or fixed
Dimensions (H x W x D)	74 x 268 x 153 mm
Weight	900 g
Color	Black/grey
Temperature range	5° to 40° C

Certifications

The DCS 6000 system conforms to standard IEC 60914.

How To Order

Portable conference unit for DCS 6000. Features an integrated touchscreen, channel selectors, headphone outputs, loudspeaker, and chip card reader. and CM buttons. Configurable as chairman, delegate, or dual delegate.	**DC 6990 P**
Arabic buttons for DM 6680 P & DC 6990 P	**DC 6990 ACC-AR**
Spanish buttons for DM 6680 P & DC 6990 P	**DC 6990 ACC-ES**
French buttons for DM 6680 P & DC 6990 P	**DC 6990 ACC-FR**
English buttons for DM 6680 P & DC 6990 P. Includes tool for fixing gooseneck mic buttons	**DC 6990 ACC-GB**
Russian buttons for DM 6680 P & DC 6990 P	**DC 6990 ACC-RU**
Chinese (traditional) buttons for DM 6680 P & DC 6990 P	**DC 6990 ACC-TW**
Chinese (simplified) buttons for DM 6680 P & DC 6990 P	**DC 6990 ACC-ZH**
English Reply button Dx 66/69xx -10PK	**ACC-GB-REP 10PK**
French Reply button Dx 66/69xx -10PK	**ACC-FR-REP 10PK**
Russian Reply button Dx 66/69xx -10PK	**ACC-RU-REP 10PK**
Simplified Chinese Reply button Dx 66/69xx -10PK	**ACC-ZH-REP 10PK**
English Reply button DC 61xx -10PK	**ACC-DC 61xx 10PK**
Spare Part Set DCS 6000 P	**SPS DCS 6000 P**

Drawing

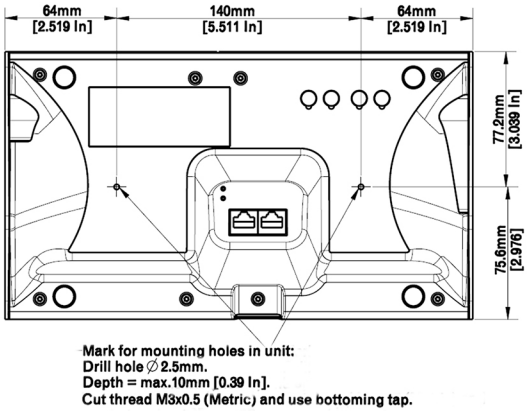

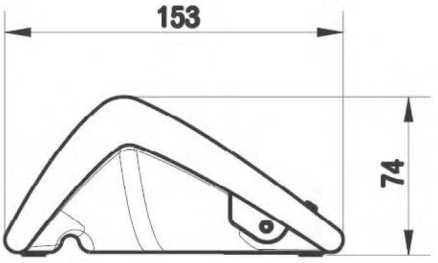

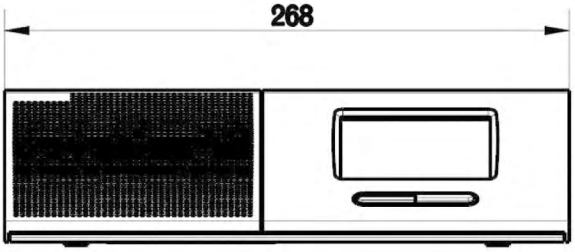

SHURE®
LEGENDARY PERFORMANCE™

United States, Canada,
Latin America, Caribbean:
Shure Incorporated
5800 West Touhy Avenue
Niles, IL 60714-4608 USA

Phone: +1 847-600-2000
Fax: +1 847-600-1212 (USA)
Fax: +1 847-600-6446
Email: info@shure.com
www.shure.com

Europe, Middle East, Africa:
Shure Europe GmbH
Jakob-Dieffenbacher-Str. 12,
75031 Eppingen, Germany

Phone: +49-7262-92490
Fax: +49-7262-9249114
Email: info@shure.de
www.shure.eu

Asia, Pacific:
Shure Asia Limited
22/F, 625 King's Road
North Point, Island East
Hong Kong

Phone: +852-2893-4290
Fax: +852-2893-4055
Email: info@shure.com.hk
www.shureasia.com

©2014 Shure Incorporated